CUH900 SERIES
Cabinet Unit Heater

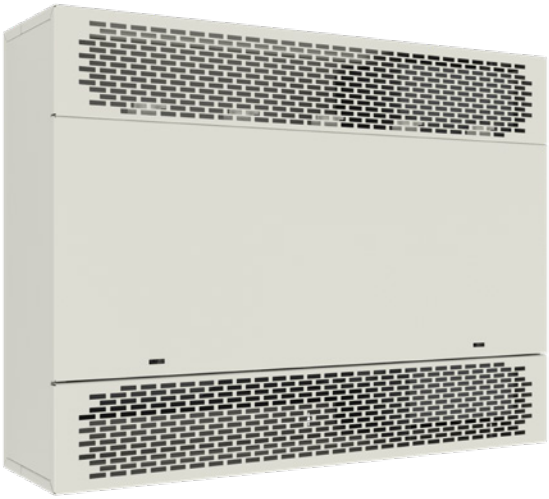

Technical Specifications:

Temp Range: 55°–85°F
CFM: 500–2,000

Ideal Spaces:

School Hallways & Churches
Transportation Terminals
Lobbies & Stairwells
Entrance Ways & Vestibule
Mechanical Rooms

White
Beige
Aluminum
Bronze
Black
Custom Colors

Contemporary Aesthetics

- Contemporary design to match modern and future architect specifications
- Standard stamped grille with optional ducted grilles

Easy Install and Maintenance

- One-person maintenance on ceiling applications with hinged front panel
- Front cover interlock de-energizes unit when front cover is removed
- Disposable air filter mounted in inlet air stream; optional permanent and washable aluminum filters available

Robust Design

- Cabinet constructed of heavy 16-gauge cold-rolled steel to provide strength and finished with a polyester powder coating for corrosion resistance
- Motors are mounted with automatic thermal overload protection; motor fuse protection is provided on all heaters to meet safety requirements
- Comes standard with two thermal safety cutouts to automatically shut off and protect the heater in the event of overheating. Reactivates the heater when operating temperature returns to normal

c UL us

5 YEAR WARRANTY ELEMENT

1 YEAR WARRANTY WORKMANSHIP

Custom Cabinet Unit Heaters: Models and Specifications

	SERIES	KW	BTU/HR	FINAL AIR TEMP	CFM*	AMPERAGE						SHIP WT.
						208 | 1Ø	208 | 3Ø	240 | 1Ø	240 | 3Ø	277 | 1Ø	480 | 3Ø	
■	CUH935 35 in. (L)	2	6,826	72° F	500	10	6	9	6	8	3	120 lbs
		3	10,239	78° F		15	9	13	8	12	4	
		4	13,652	84° F		20	12	17	10	15	6	
		5	17,065	90° F		25	15	22	13	19	7	
		6	20,478	96° F		30	17	26	15	22	8	
		7	23,891	102° F		34	20	30	18	26	9	
		8	27,304	108° F		39	23	34	20	30	10	
■	CUH945 45 in. (L) 160 LBS.	4	13,652	72° F	1,000	20	12	18	11	16	6	160 lbs
		6	20,478	78° F		30	18	26	16	23	8	
		8	27,304	84° F		40	23	34	20	30	11	
		10	34,130	90° F		48	29	43	25	37	13	
		12	40,956	96° F		59	34	51	30	44	16	
		14	47,782	102° F		68	40	59	35	52	18	
		16	54,608	108° F		78	46	68	40	59	20	
■	CUH968 68 in. (L) 260 LBS.	15	51,195	90° F	1,500	—	44	—	38	—	20	260 lbs
		21	71,673	102° F		—	60	—	52	—	27	
		24	81,912	108° F		—	69	—	60	—	31	
■	CUH978 78 in. (L) 300 LBS.	20	68,260	90° F	2,000	—	58	—	50	—	26	300 lbs
		24	81,912	96° F		—	69	—	60	—	31	
		28	95,564	102° F		—	80	—	70	—	36	
		32	109,216	108° F		—	91	—	79	—	41	

SKU Legend: ■ = Made to Order (Contact your local Marley Sales Representative for typically associated lead times)

NOTE: RED numbers represent circuit breakers or fused disconnect required. **380V units will operate with a 16% reduction in heating capacity. +Based on 60°F inlet air temperature. *Values shown is high speed. All models operate at 60hz.

Multiple Air Flow Combinations:

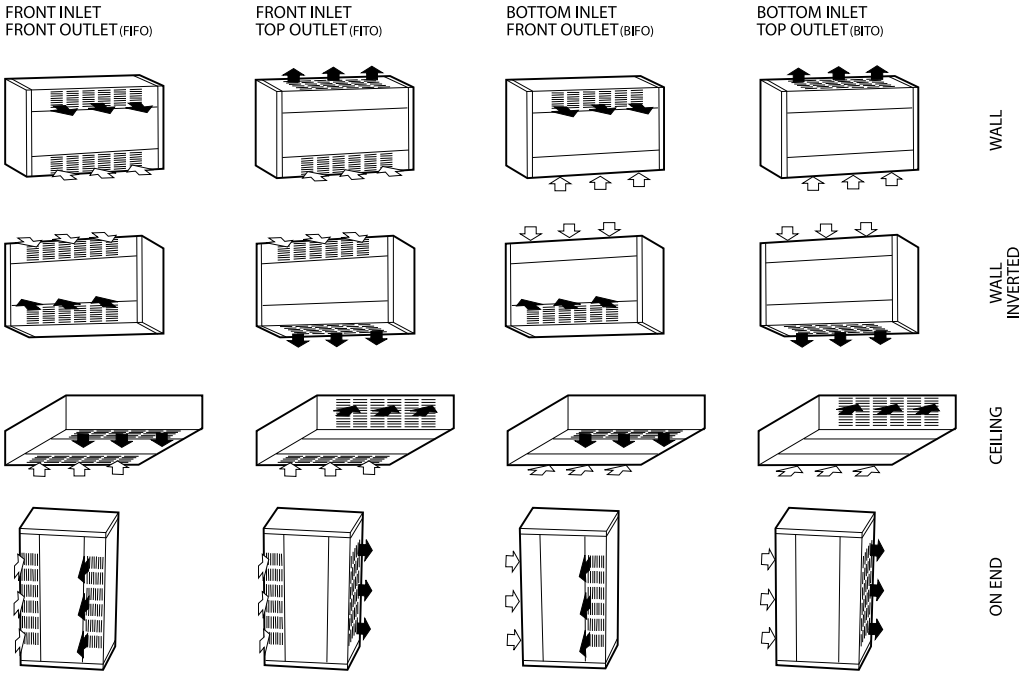

CUH900 SERIES
Cabinet Unit Heater

Scan the QR code to access additional specs and features

Optional Accessories:

CATALOG NO.	DESCRIPTION	COMPATIBLE WITH	FUNCTION	SHIP WT.
CUH935RTK	Ceiling or Wall Recess Trim Kit	CUH935	Provides a neat finish to semi-recessed or full recessed application.	3 lbs
CUH945RTK		CUH945		4 lbs
CUH968RTK		CUH968		6 lbs
CUH978RTK		CUH978		7 lbs
CUH935BK	Floor/Toe-Space Base Kit	CUH935	16 gauge, muted black base is recessed from the heater front and sides to provide an attractive and practical floor mounting application.	9 lbs
CUH945BK		CUH945		10 lbs
CUH968BK		CUH968		13 lbs
CUH978BK		CUH978		15 lbs
CUH935WF	Permanent, Reusable Washable Filter	CUH935	Replaces standard filter Washable filter can be cleaned and replaced.	4 lbs
CUH945WF		CUH945		6 lbs
CUH968WF		CUH968		10 lbs
CUH978WF		CUH978		12 lbs

*Add the appropriate color code suffix after the catalog number; (i.e. W for White, B for Black, etc.)

Suggested Controls

Now compatible with SmartSeries Plus when used with 24VAC control transformer!

Optional Factory-Installed Accessories:

ACCESSORY	DESCRIPTION	
	STANDARD	OPTIONAL
2-Stage Thermostat Built-or Remote	Built-in (or remote-mounted) single-pole, single-stage thermostat that cycles the element(s) and fan. Fan speed and element wattage selected by the built-in HIGH or LOW selector switch.	Built-in (or remote-mounted) two-stage thermostat that cycles 2/3 of the element for during first stage and full heat during second stage. Fan cycles on high speed only.
Smartseries® Plus (Built-In -r Remote)	Built-in (or remote mounted) two stage thermostat runs 2/3 elements on stage 1 and full heat for stage 2. Fan cycles on high speed only. Comes with BACnet BMS compatibility, scheduling, cooling mode(Fan-Only), and keypad lock.	Supply terminal block in the control compartment.
Dead Front Disconnect Switch	A three pole non-fused disconnect switch disconnects power to the heater. Design prevents entry into the control compartment until disconnect switch is turned to the OFF position.	Supply terminal block in the control compartment.
Dead Front Fused Disconnect Switch†	A three pole non-fused disconnect switch and circuit breaker(s) sized to the heater load protects heater and disconnects power to the heater.	Design prevents entry into the control compartment until disconnect switch is turned to the OFF position.
On/Off Switch	No switch supplied.	Built-in switch provides continuous fan operation with or without heat, or automatic fan cycling as the heat cycles on and off.
Key Lock For Front Cover	Two (2) slotted head spring latches.	Two (2) toolhead key lock style spring latches prevent unauthorized adjustment of controls and provides additional safety from injury due to contact with internal components.
Inlet or Discharge Duct Collar(S)	Standard Architectural Grilles	Collars provide easy connection of field supplied duct work. We do not recommend exceeding 0.2 in. wg external static pressure. Heater with duct collars are supplied with a single speed high static motor.
Louver Grilles	Standard Architectural Grille.	Retrofit option to match the old louver design of the cabinet unit heater. This option is only available for both inlet a nd discharge openings ordered at the same time. Can not be ordered separately.

†Plus price of circuit breaker.
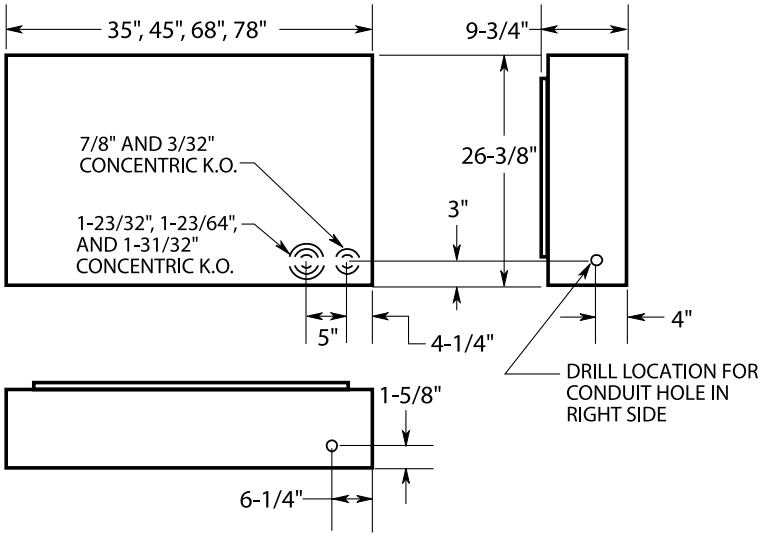
Dimensions and Clearances: